PSPX Series

Features

- CYLINDRICAL LEADLESS TYPE FOR SUPFACE MOUNTING
- SUPER LOW ESR & HIGH RIPPLE CURRENT.
- CAPACITANCE VALUES UP TO 820 μ F.
- 6.3 × 6.3mm.~10 × 10.8mm CASE SIZES
- COMPATIBLE WITH REFLOW SOLDERING

Specificatilons

Item	Characteristics
Operating Temperature Range	–55℃~+105℃
Rated Voltage Range	4V ~ 16V
Capacitance Tolerance	M (± 20%) (20℃, 120Hz)
Leakage Current	Less than 0.1CV or 50 μ A whichever is greater
Dissipation Factor	Not more than the values in Table 1
ESR	Not more than the values in Table 1
Load Life *	After 2000 hours' application of rated voltage at 105℃ (6.3mm Dia and all 4Vdc parts 1000), the capacitors shall meet the following requirement:
	Capacitance change: Within ± 20% of the value before test
	Dissipation factor: Not to exceed 150% of the value specified
	Leakage current: Not to exceed the value specified
	ESR: Not to exceed 150% of initial specified value
Moisture Resistance (1000h,Stored at 60℃,90 to 95%R.H)	Capacitance change: Within ± 20% of the value before test
	Dissipation factor: Not to exceed 150% of the value specified
	Leakage current: Not to exceed the value specified
	ESR: Not to exceed 150% of initial specified value

Dimensions

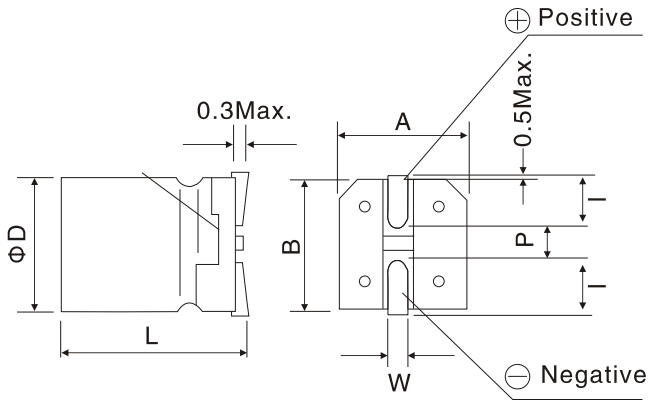

PSPX Series

(mm)

ΦD ± 0.5	Lmax.	A ± 0.2	W	I ± 0.2	P ± 0.2	B ± 0.2
6.3	6.3	6.6	0.5~0.8	2.25	2.2	6.6
8	10.8	8.3	0.7~1.0	2.9	3.2	8.3
10	10.8	10.3	1.1~1.4	3.2	4.6	10.3

Table 1: PSPX Series Characteristics List

WV	μF	ΦD(mm)	L(mm)	ESR(mΩ)max at 20℃ 100kHz	Ripple current (mΩ)max at 105℃ 100kHz	Dissipation factor at 20℃ 120Hz
4.0	470	8	10.8	30	1550	0.24
	680	10	10.8	25	2090	0.24
	820	10	10.8	23	2180	0.24
6.3	100	6.3	6.3	50	1120	0.22
	220	8	10.8	30	1550	0.22
	330	8	10.8	30	1550	0.22
	390	8	10.8	30	1550	0.22
	470	10	10.8	25	2090	0.22
	560	10	10.8	25	2090	0.22
10	22	6.3	6.3	60	1020	0.20
	33	6.3	6.3	60	1020	0.20
	47	6.3	6.3	60	1020	0.20
	100	8	10.8	30	1550	0.20
	150	8	10.8	30	1550	0.20
	220	8	10.8	30	1550	0.20
	330	8	10.8	30	1550	0.20
	390	10	10.8	25	2090	0.20
	470	10	10.8	25	2090	0.20
16	22	6.3	6.3	70	900	0.18
	47	8	10.8	45	1200	0.18
	100	8	10.8	45	1200	0.18
	150	10	10.8	40	1810	0.18