DCG 型超高压圆片陶瓷电容器

Super High Voltage Disc Ceramic Capacitors Type DCG

■特点

Feature

- ●宽的额定电压范围，宽的电容量范围宽
  Wide rated voltage range, wide nominal capacitance range
- ●阻燃材料包封
  Flame-retardant insulating coating applied

■推荐应用领域

Recommended Application

- ●高压电源的滤波电路
  Filter circuit of high voltage power
- ●电视机和显示器的高压电路
  High voltage circuit of television set and monitor
- ●其它电子设备的高压电路
  High voltage circuit of various electronic equipments

■产品代码

Explanation of Part Numbers

1 2 3	4 5 6	7	8 9	10 11 12	13	14	15	16	17	18	19
DCG	102	K	43	Y 5 P	U	7	3	L	7	□	0

型号 Code

代码 Code	电容量允许偏差 Capacitance Tolerance
J	±5%
K	±10%
M	±20%
Z	+80~-20%

例如 Ex.	电容量 Capacitance
331	330pF
102	1000pF

尺寸代码 Size Code

温度特性 Temperature Characteristics	
SL	Y5P
Y5U	Y5V

代号 Code	引线直径 Lead Diameter
7	0.65mm
8	0.80mm

代号 Code	散件引线长度 Lead Length of Bulks
1	11mm max.
3	25mm max

代码 Code	额定电压 Rated Voltage
U	4kVDC
V	6kVDC
Z	8kVDC
C	10kVDC
A	12kVDC
M	15kVDC

代号 Code	引线间距 Lead Spacing
7	7.5mm
0	10.0mm

引线式样 Lead Style	
L	P

内部管理代码 Interior Managing Code

代号 Code	含意 Meanings
0	符合 RoHS Meeting RoHS
1	普通 Ordinary

■技术指标

Specification

特性 Characteristics	温度特性 SL Temp. Char. SL	温度特性 Y5P Temp. Char. Y5P	温度特性 Y5U Temp. Char. Y5U	温度特性 Y5V Temp. Char. Y5V
工作温度 Operating Temperature	-30 ~ 85° C			
额定电压 Rated Voltage	4kVDC ~ 6kVDC	4kVDC ~ 15kVDC	4kVDC ~ 15kVDC	4kVDC ~ 10kVDC
耐电压 Withstanding Voltage	1.5 倍额定电压 1.5 times related voltage			
电容量 Capacitance	在 25℃，1 Vrms 和 1KHz(SL 产品,在 1MHz 下)下测试，电容量在允许偏差范围内 Within the specified tolerance, testing at 25℃，1 Vrms and 1KHz(at1MHz for SL products)			
	10 ~ 330 PF	100 ~ 2200 PF	470 ~ 3300 PF	1000 ~ 10000 PF
损耗因子 Dissipation Factor	C_R<30PF，Q≥400+20C_R C_R≥30pF，Q≥1000	tg δ ≤ 2.5 %	tg δ ≤3.5%	
绝缘电阻 Insulation Resistance	在 500VDC 下充电 60 秒, Rj≥ 10000 MΩ Charge at 500VDC for 60 seconds, Rj≥ 10000 MΩ			

温度特性 Temperature Characteristics

温度特性代码 Temperature Characteristics Code	SL	Y5P	Y5U	Y5V
电容量变化率(%)/ 温度系数(10^{-6}/° C) max. Cap. Change(%)/ Temp. Coefficient(10^{-6}/° C)	+100~-1000 10^{-6}/° C	±10%	+22~-56%	+22~-82%
温度范围(° C) Temp. Range(° C)	-30~+85℃			

■推荐产品规格及代码（包括尺寸）

Specification and Part Number of Recommended Products （Including Dimensions）

额定电压 4kVDC

Rated Voltage 4kVDC

温度特性 Temp. Char.	电容量 Capacitance (pF)	电容量公差 Cap. Tolerance (%)	产品代码 Part Number	尺寸 Dimensions(mm) 电容器直径 Body Dia. D_{max}	电容器厚度 Thick-ness T_{max}	引线间距 Lead Spacing F	引线直径 Lead Dia. d	引线最短长度 (mm) Min. Lead Length (mm)	引线式样 Lead Style	尺寸代码 Size Code
SL	10	±5	DCG100J26SL U73L7□0	6.5	6.5	7.5±1.0	0.65±0.05	25	L	26
	15	±5	DCG150J26SL U73L7□0	6.5	6.5	7.5±1.0	0.65±0.05			26
	22	±5	DCG220J26SL U73L7□0	6.5	6.5	7.5±1.0	0.65±0.05			26
	33	±5	DCG330J30SL U73L7□0	7.5	6.5	7.5±1.0	0.65±0.05			30
	47	±5	DCG470J34SL U73L7□0	8.5	6.5	7.5±1.0	0.65±0.05	25	L	34
	68	±10	DCG680K37SL U73L0□0	9.5	6.5	10.0±2.0	0.65±0.05			37
	100	±10	DCG101K43SL U73L0□0	11.0	6.5	10.0±2.0	0.65±0.05			43
	150	±10	DCG151K53SL U73L0□0	13.5	6.5	10.0±2.0	0.65±0.05			53
	220	±10	DCG221K57SL U73L0□0	14.5	6.5	10.0±2.0	0.65±0.05	25	L	57
	270	±10	DCG271K63SL U83L0□0	16.0	6.5	10.0±2.0	0.80±0.05			63
	330	±10	DCG331K69SL U83L0□0	17.5	6.5	10.0±2.0	0.80±0.05			69
Y5P	100	±10	DCG101K26Y5PU73L7□0	6.5	6.5	7.5±1.0	0.65±0.05			26
	150	±10	DCG151K26Y5PU73L7□0	6.5	6.5	7.5±1.0	0.65±0.05	25	L	26
	220	±10	DCG221K30Y5PU73L7□0	7.5	6.5	7.5±1.0	0.65±0.05			30
	330	±10	DCG331K30Y5PU73L7□0	7.5	6.5	7.5±1.0	0.65±0.05			30
	470	±10	DCG471K34Y5PU73L7□0	8.5	6.5	7.5±1.0	0.65±0.05			34
	680	±10	DCG681K37Y5PU73L0□0	9.5	6.5	10.0±2.0	0.65±0.05	25	L	37
	1000	±10	DCG102K43Y5PU73L0□0	11.0	6.5	10.0±2.0	0.65±0.05			43
	1500	±10	DCG152K53Y5PU73L0□0	13.5	6.5	10.0±2.0	0.65±0.05			53
	2200	±10	DCG222K63Y5PU83L0□0	14.5	6.5	10.0±2.0	0.80±0.05			63
Y5U	1000	±20	DCG102M37Y5UU73L0□0	9.5	6.5	10.0±2.0	0.65±0.05	25	L	37
	1500	±20	DCG152M43Y5UU73L0□0	11.0	6.5	10.0±2.0	0.65±0.05			43
	2200	±20	DCG222M53Y5UU73L0□0	13.5	6.5	10.0±2.0	0.65±0.05			53
	3300	±20	DCG332M57Y5UU73L0□0	14.5	6.5	10.0±2.0	0.65±0.05			57

注： 1）散件的引线长度也可根据客户要求订制。
2）引线式样有 P 型、L 型供选择。

Note: 1）Lead length can be designed as required for bulk.
2）There are style P, style L for the choice of lead style.
3）仅提供散件产品。
3）Only bulk products supplied.

■推荐产品规格及代码（包括尺寸）

Specification and Part Number of Recommended Products （Including Dimensions）

额定电压　6kVDC

Rated Voltage　6kVDC

温度特性 Temp. Char.	电容量 Capacitance (pF)	电容量公差 Cap. Tolerance (%)	产品代码 Part Number	尺寸 Dimensions(mm) 电容器直径 Body Dia. D_{max}	电容器厚度 Thick-ness T_{max}	引线间距 Lead Spacing F	引线直径 Lead Dia. d	引线最短长度 (mm) Min. Lead Length (mm)	引线式样 Lead Style	尺寸代码 Size Code
SL	10	±5	DCG100J34SL V73L0□0	8.5	7.0	10.0±2.0	0.65±0.05	25	L	34
	15	±5	DCG150J34SL V73L0□0	8.5	7.0	10.0±2.0	0.65±0.05			34
	22	±5	DCG220J34SL V73L0□0	8.5	7.0	10.0±2.0	0.65±0.05			34
	33	±5	DCG330J34SL V73L0□0	8.5	7.0	10.0±2.0	0.65±0.05			34
	47	±5	DCG470J37SL V73L0□0	9.5	7.0	10.0±2.0	0.65±0.05	25	L	37
	68	±10	DCG680K43SL V73L0□0	11.0	7.0	10.0±2.0	0.65±0.05			43
	100	±10	DCG101K53SL V83L0□0	13.5	7.0	10.0±2.0	0.80±0.05			53
	150	±10	DCG151K63SL V83L0□0	16.0	7.0	10.0±2.0	0.80±0.05			63
	180	±10	DCG181K63SL V83L0□0	16.0	7.0	10.0±2.0	0.80±0.05	25	L	63
Y5P	100	±10	DCG101K34Y5PV73L0□0	8.5	7.0	10.0±2.0	0.65±0.05			34
	150	±10	DCG151K34Y5PV73L0□0	8.5	7.0	10.0±2.0	0.65±0.05			34
	220	±10	DCG221K34Y5PV73L0□0	8.5	7.0	10.0±2.0	0.65±0.05			34
	330	±10	DCG331K37Y5PV73L0□0	9.5	7.0	10.0±2.0	0.65±0.05	25	L	37
	470	±10	DCG471K37Y5PV73L0□0	9.5	7.0	10.0±2.0	0.65±0.05			37
	680	±10	DCG681K43Y5PV73L0□0	11.0	7.0	10.0±2.0	0.65±0.05			43
	1000	±10	DCG102K53Y5PV83L0□0	13.5	7.0	10.0±2.0	0.80±0.05			53
	1500	±10	DCG152K63Y5PV83L0□0	16.0	7.0	10.0±2.0	0.80±0.05	25	L	63
	2200	±10	DCG222K79Y5PV83L0□0	16.0	7.0	10.0±2.0	0.80±0.05			79
Y5U	1000	±20	DCG102M43Y5UV73L0□0	11.0	7.0	10.0±2.0	0.65±0.05			43
	2200	±20	DCG222M57Y5UV83L0□0	14.5	7.0	10.0±2.0	0.80±0.05			57
Y5V	1000	+80～-20	DCG102Z37Y5VV73L0□0	9.5	7.0	10.0±2.0	0.65±0.05	25	L	37
	1500	+80～-20	DCG152Z37Y5VV73L0□0	9.5	7.0	10.0±2.0	0.65±0.05			37
	2200	+80～-20	DCG222Z43Y5VV73L0□0	11.0	7.0	10.0±2.0	0.65±0.05			43
	3300	+80～-20	DCG332Z47Y5VV83L0□0	12.0	7.0	10.0±2.0	0.80±0.05			47
	4700	+80～-20	DCG472Z57Y5VV83L0□0	14.5	7.0	10.0±2.0	0.80±0.05	25	L	57
	6800	+80～-20	DCG682Z69Y5VV83L0□0	17.5	7.0	10.0±2.0	0.80±0.05			69
	10000	+80～-20	DCG103Z79Y5VV83L0□0	20.0	7.0	10.0±2.0	0.80±0.05			79

注：1）散件的引线长度也可根据客户要求订制。
2）引线式样有 P 型、L 型供选择。

Note: 1）Lead length can be designed as required for bulk.
2）There are style P, style L for the choice of lead style.

3）仅提供散件产品。

3）Only bulk products supplied.

■推荐产品规格及代码（包括尺寸）

Specification and Part Number of Recommended Products （Including Dimensions）

额定电压 8kVDC

Rated Voltage 8kVDC

温度特性 Temp. Char.	电容量 Capacitance (pF)	电容量公差 Cap. Tolerance (%)	产品代码 Part Number	尺寸 Dimensions(mm) 电容器直径 Body Dia. D_{max}	电容器厚度 Thick -ness T_{max}	引线间距 Lead Spacing F	引线直径 Lead Dia. d	引线最短长度 (mm) Min. Lead Length (mm)	引线式样 Lead Style	尺寸代码 Size Code
Y5P	100	±10	DCG101K34Y5PZ73L0□0	8.5	8.0	10.0±2.0	0.65±0.05	25	L	34
	150	±10	DCG151K34Y5PZ73L0□0	8.5	8.0	10.0±2.0	0.65±0.05			34
	220	±10	DCG221K34Y5PZ73L0□0	8.5	8.0	10.0±2.0	0.65±0.05			34
	330	±10	DCG331K37Y5PZ73L0□0	9.5	8.0	10.0±2.0	0.65±0.05			37
	470	±10	DCG471K43Y5PZ73L0□0	11.0	8.0	10.0±2.0	0.65±0.05	25	L	43
	680	±10	DCG681K53Y5PZ83L0□0	13.5	8.0	10.0±2.0	0.80±0.05			53
	1000	±10	DCG102K63Y5PZ83L0□0	16.0	8.0	10.0±2.0	0.80±0.05			63
	1500	±10	DCG152K73Y5PZ83L0□0	18.5	8.0	10.0±2.0	0.80±0.05			73
Y5U	470	±20	DCG471M37Y5UZ73L0□0	9.5	8.0	10.0±2.0	0.65±0.05	25	L	37
	680	±20	DCG681M43Y5UZ73L0□0	11.0	8.0	10.0±2.0	0.65±0.05			43
	1000	±20	DCG102M43Y5UZ73L0□0	11.0	8.0	10.0±2.0	0.65±0.05			43
	1500	±20	DCG152M53Y5UZ83L0□0	13.5	8.0	10.0±2.0	0.80±0.05			53

注： 1）散件的引线长度也可根据客户要求订制。 2）引线式样有 P 型、L 型供选择。

Note: 1）Lead length can be designed as required for bulk. 2）There are style P, style L for the choice of lead style.

3）仅提供散件产品。

3）Only bulk products supplied.

额定电压 10kVDC

Rated Voltage 10kVDC

温度特性 Temp. Char.	电容量 Capacitance (pF)	电容量公差 Cap. Toleran`ce (%)	产品代码 Part Number	尺寸 Dimensions(mm) 电容器直径 Body Dia. D_{max}	电容器厚度 Thick -ness T_{max}	引线间距 Lead Spacing F	引线直径 Lead Dia. d	引线最短长度 (mm) Min. Lead Length (mm)	引线式样 Lead Style	尺寸代码 Size Code
Y5P	100	±10	DCG101K37Y5PC73L0□0	9.5	8.5	10.0±2.0	0.65±0.05	25	L	37
	150	±10	DCG151K37Y5PC73L0□0	9.5	8.5	10.0±2.0	0.65±0.05			37
	220	±10	DCG221K37Y5PC73L0□0	9.5	8.5	10.0±2.0	0.65±0.05			37
	330	±10	DCG331K43Y5PC73L0□0	11.0	8.5	10.0±2.0	0.65±0.05			43
	470	±10	DCG471K47Y5PC83L0□0	12.0	8.5	10.0±2.0	0.80±0.05	25	L	47
	680	±10	DCG681K53Y5PC83L0□0	13.5	8.5	10.0±2.0	0.80±0.05			53
	1000	±10	DCG102K63Y5PC83L0□0	16.0	8.5	10.0±2.0	0.80±0.05			63
Y5U	1000	±20	DCG102M47Y5UC83L0□0	12.0	8.5	10.0±2.0	0.80±0.05			47
	2200	±20	DCG222M73Y5UC83L0□0	18.5	8.5	10.0±2.0	0.80±0.05	25	L	73
Y5V	1000	+80～-20	DCG102Z37Y5VC73L0□0	9.5	8.5	10.0±2.0	0.65±0.05			37
	2200	+80～-20	DCG222Z47Y5VC83L0□0	12.0	8.5	10.0±2.0	0.80±0.05			47
	3300	+80～-20	DCG332Z57Y5VC83L0□0	14.5	8.5	10.0±2.0	0.80±0.05			57
	4700	+80～-20	DCG472Z69Y5VC83L0□0	17.5	8.5	10.0±2.0	0.80±0.05			69

注： 1）散件的引线长度也可根据客户要求订制。 2）引线式样有 P 型、L 型供选择。

Note: 1）Lead length can be designed as required for bulk. 2）There are style P, style L for the choice of lead style.

3）仅提供散件产品。

3）Only bulk products supplied.

■推荐产品规格及代码（包括尺寸）

Specification and Part Number of Recommended Products （Including Dimensions）

额定电压　12kVDC

Rated Voltage　12kVDC

温度特性 Temp. Char.	电容量 Capacitance (pF)	电容量公差 Cap. Tolerance (%)	产品代码 Part Number	尺寸 Dimensions(mm) 电容器直径 Body Dia. D_{max}	电容器厚度 Thick-ness T_{max}	引线间距 Lead Spacing F	引线直径 Lead Dia. d	引线最短长度 (mm) Min. Lead Length (mm)	引线式样 Lead Style	尺寸代码 Size Code
Y5P	100	±10	DCG101K37Y5PA73L0□0	9.5	9.0	10.0±2.0	0.65±0.05	25	L	37
	150	±10	DCG151K37Y5PA73L0□0	9.5	9.0	10.0±2.0	0.65±0.05			37
	220	±10	DCG221K37Y5PA73L0□0	9.5	9.0	10.0±2.0	0.65±0.05			37
	330	±10	DCG331K43Y5PA83L0□0	11.0	9.0	10.0±2.0	0.80±0.05			43
	470	±10	DCG471K53Y5PA83L0□0	13.5	9.0	10.0±2.0	0.80±0.05	25	L	53
	680	±10	DCG681K57Y5PA83L0□0	14.5	9.0	10.0±2.0	0.80±0.05			57
	1000	±10	DCG102K69Y5PA83L0□0	17.5	9.0	10.0±2.0	0.80±0.05			69
Y5U	1000	±20	DCG102M53Y5UA83L0□0	13.5	9.0	10.0±2.0	0.80±0.05			53

注：1）散件的引线长度也可根据客户要求订制。　2）引线式样有 P 型、L 型供选择。

Note: 1）Lead length can be designed as required for bulk.　2）There are style P, style L for the choice of lead style.

3）仅提供散件产品。

3）Only bulk products supplied.

额定电压　15kVDC

Rated Voltage　15kVDC

温度特性 Temp. Char.	电容量 Capacitance (pF)	电容量公差 Cap. Tolerance (%)	产品代码 Part Number	尺寸 Dimensions(mm) 电容器直径 Body Dia. D_{max}	电容器厚度 Thick-ness T_{max}	引线间距 Lead Spacing F	引线直径 Lead Dia. d	引线最短长度 (mm) Min. Lead Length (mm)	引线式样 Lead Style	尺寸代码 Size Code
Y5P	100	±10	DCG101K37Y5PM83L0□0	9.5	10.0	10.0±2.0	0.80±0.05	25	L	37
	150	±10	DCG151K37Y5PM83L0□0	9.5	10.0	10.0±2.0	0.80±0.05			37
	220	±10	DCG221K43Y5PM83L0□0	10.5	10.0	10.0±2.0	0.80±0.05			43
	330	±10	DCG331K47Y5PM83L0□0	12.0	10.0	10.0±2.0	0.80±0.05			47
	470	±10	DCG471K57Y5PM83L0□0	14.5	10.0	10.0±2.0	0.80±0.05	25	L	57
	681	±10	DCG681K69Y5PM83L0□0	17.5	10.0	10.0±2.0	0.80±0.05			69
	1000	±10	DCG102K79Y5PM83L0□0	20.0	10.0	10.0±2.0	0.80±0.05			79

注：1）散件的引线长度也可根据客户要求订制。　2）引线式样有 P 型、L 型供选择。

Note: 1）Lead length can be designed as required for bulk.　2）There are style P, style L for the choice of lead style.

3）仅提供散件产品。

3）Only bulk products supplied.

■尺寸（单位:mm，不按比例）

Dimensions in mm （not to scale）

- 引线形状
- Lead Style

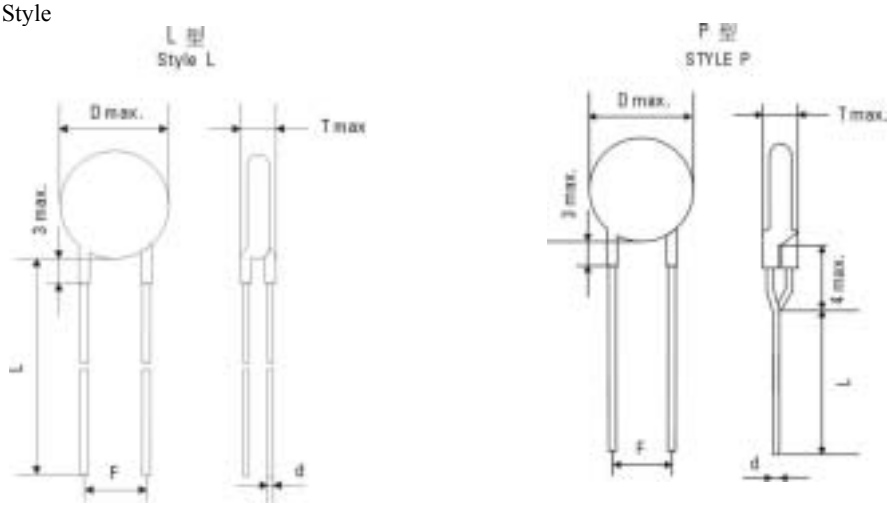

■包装规格

Packing Specification

●标准包装

Standard Packing

散件: 500 至 1000 个/包

Bulk: 500~1000 pcs./ bag

■典型特性曲线
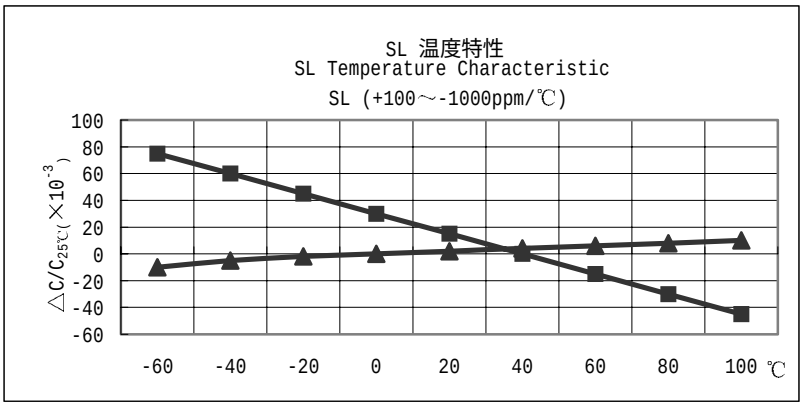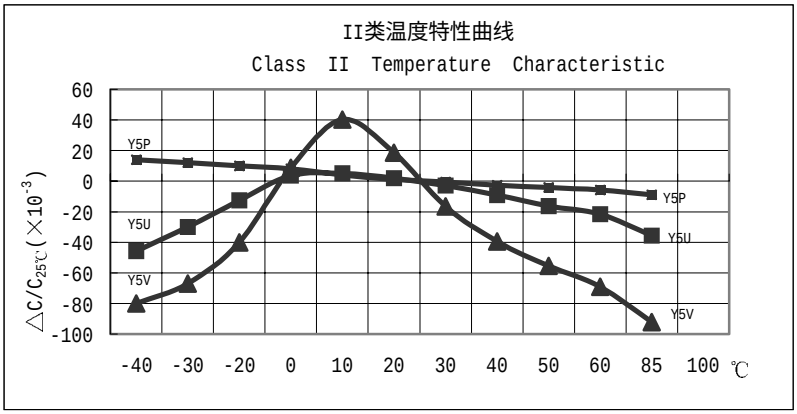
Typical Characteristics Graph